RECHNER SENSORS

More than 40 years experience

The World Leader In Capacitive Sensor Technology And Quality

Capacitive Proximity Sensors
Capacitive Level Systems
Inductive Proximity Sensors
Calorimetric Flow Sensors
ATEX Certified Sensors And Amplifiers

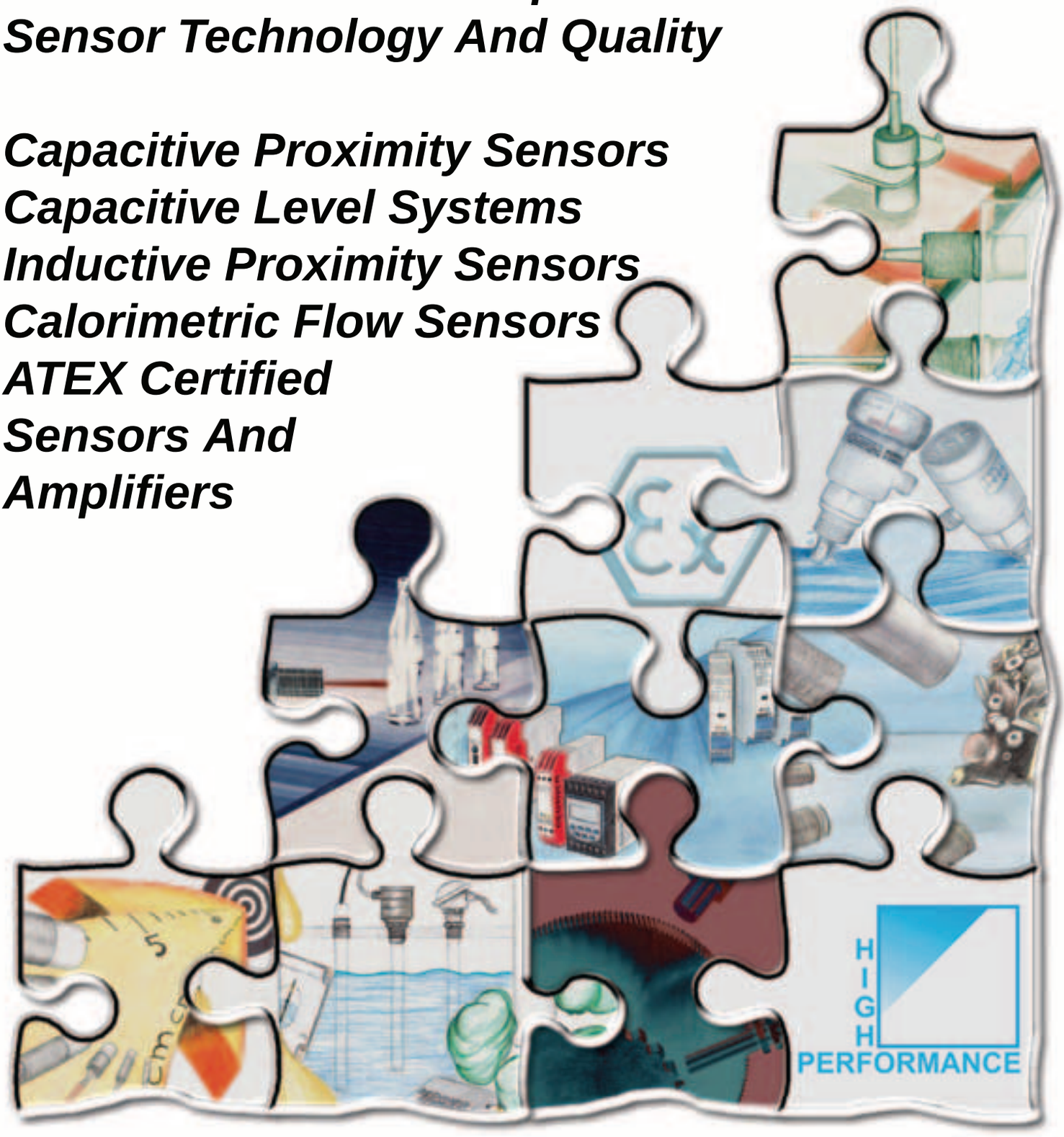

INFOTECNO 05/06 N. 226
SENSORI E COMUNICAZIONE

SENSORMATIC SRL - VIA DELLA BEVERARA 13 - 40131 BOLOGNA - TEL. 0516353511 - FAX 0516346741 - WWW.SENSORMATIC.IT - SMBOX@SENSORMATIC.IT

SENSORI CAPACITIVI RECHNER

NUOVA SERIE 26 AD ELEVATE PRESTAZIONI

- **Modalità d'innesto: TRICLAMP o filettato 1"G**
- **Custodia in PTFE alimentare/farmaceutico**
- **Superficie attiva con profilo arrotondato**
- **Ideale per basse costanti dielettriche e prodotti adesivi**
- **Tre versioni: standard, fino a 100°C e ATEX**
- **La serie offre soluzioni per un'ampia gamma di controlli di livello**

STANDARD	200 MM	TRICLAMP
KAS-80-26-A-PTFE-1"	KAS-80-26-A-200-PTFE-1"	a richiesta KAS-80-26-A-PTFE-Tri
CIP 120°C KAS-80-26-A-PTFE-1"-100°C	a richiesta (CIP 120°C) KAS-80-26-A-200-PTFE-1"-100°C	CIP 120°C KAS-80-26-A-PTFE-Tri-100°C
ATEX KAS-80-26-A-PTFE-1"-StEx-N	ATEX KAS-80-26-A-200-PTFE-1"-StEx-N	ATEX KAS-80-26-A-PTFE-Tri-StEx-N
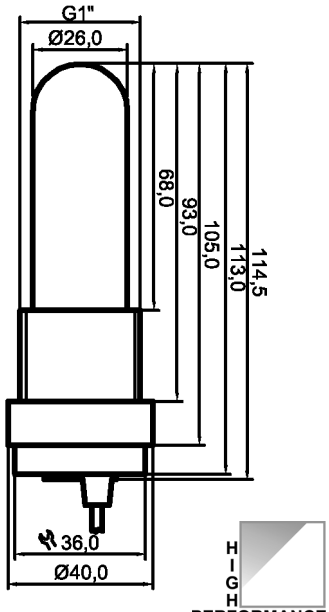	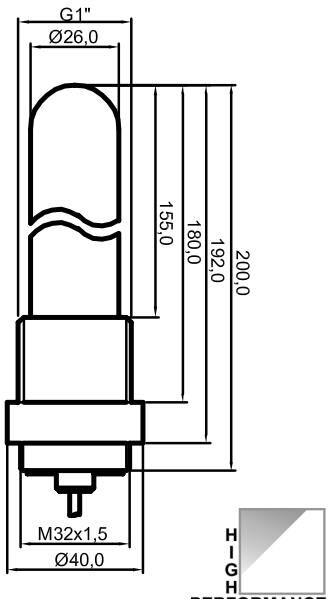	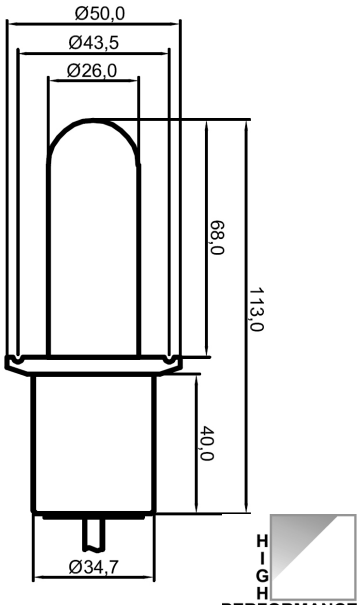

Capacitive sensors

Series 80 - PNP

Housing Ø = 26mm/ 1“/ 40mm

- **Housing material PTFE**
- **Special version with flange. Sealing can be made with a gasket or PTFE-tape (not supplied with the sensor)**

Certificate: CE

Technical data

Operating distance Sn [mm], flush mounting	12, no
Operating distance min./max. [mm] adjustable	0..20
Electrical version	4-wire DC
Output	antivalent
Type NPN	
Art.-No.	
Connection diagram No.	

Type PNP	**KAS-80-26-A-PTFE-1"**
Art.-No.	**813 100**
Connection diagram No.	**6**
Operating voltage (U_B)	10...35 V DC
Output current max. (I_e)	2 x 250 mA
Load current min.	-
Voltage drop max. (U_d)	≤ 2.0 V
Permitted residual ripple max.	10 %
No-load current (I_o)	typ. 15 mA
Frequency of operating cycles max.	50 Hz
Permitted ambient temperature	-25...+70°C
LED-display	green/yellow
Protective circuit	built-in
Degree of protection IEC 529	IP 67
Connection cable	2 m 4 x 0.34 mm²
Housing material	PTFE
Active surface	PTFE
Lid	PA

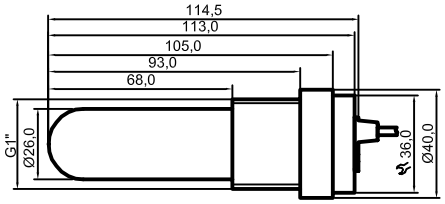

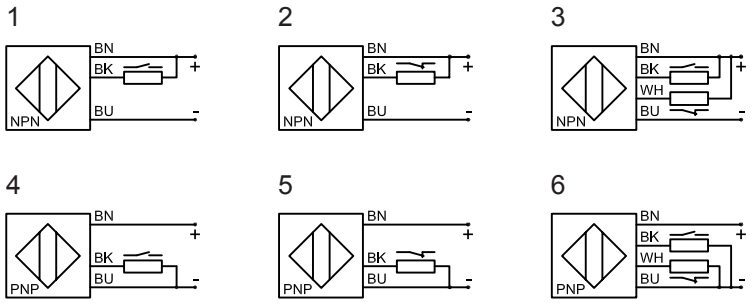

All specifications are subject to change without notice. (22-06-2004)

RECHNER Sensoren Entwicklungs- und Vertriebs GmbH • Gabelsbergerstraße 8-10 • D-68623 Lampertheim • Tel. +49 (0) 62 06 50 07-0 • Fax +49 (0) 62 06 50 07-20 • email info@rechner-sensors.de • www.rechner-sensors.de

Certificate: CE

Capacitive sensors

Series 80 - PNP

Housing Ø = 26mm/ 1“/ 40mm

- **Housing material PTFE**
- **Useable for applications with an ambient temperature of up to 100°C**
- **Special version with flange. Sealing can be made with a gasket or PTFE-tape (not supplied with the sensor)**

Technical data

Operating distance Sn [mm], flush mounting	12, no
Operating distance min./max. [mm] adjustable	0..20
Electrical version	4-wire DC
Output	antivalent
Type NPN	
Art.-No.	
Connection diagram No.	

Type PNP	**KAS-80-26-A-PTFE-1"-100°C**
Art.-No.	**KA0277**
Connection diagram No.	**6**
Operating voltage (U_B)	10...35 V DC
Output current max. (I_e)	2 x 250 mA
Load current min.	-
Voltage drop max. (U_d)	≤ 2.0 V
Permitted residual ripple max.	10 %
No-load current (I_o)	typ. 15 mA
Frequency of operating cycles max.	50 Hz
Permitted ambient temperature	-25...+100°C
LED-display	green/yellow
Protective circuit	built-in
Degree of protection IEC 529	IP 67
Connection cable	2 m 4 x 0.34 mm²
Housing material	PTFE
Active surface	PTFE
Lid	PA

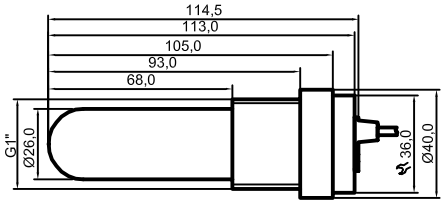

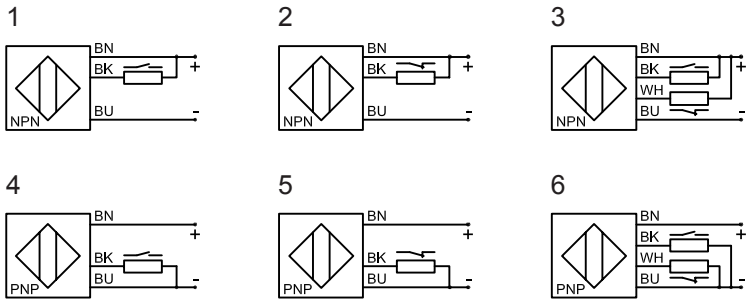

All specifications are subject to change without notice. (22-06-2004)

Certificate: **DMT 01 ATEX E 157**

Capacitive sensors
Series 80 - PNP - StEx - ATEX

HIGH PERFORMANCE

Housing Ø = 26mm/ 1"/ 40mm

- **Ex II 1/2 D IP 67 T 101°C**
- **For use in zone 20**
- **Ex II 2 G EEx m II**
- **For use in areas where there is a risk of explosion.**
- **Housing material PTFE**
- **Special version with flange. Sealing can be made with a gasket or PTFE-tape (not supplied with the sensor)**

Technical data

Operating distance Sn [mm], flush mounting	8, no
Operating distance min./max. [mm] adjustable	0...20
Electrical version	4-wire DC
Output	antivalent
Type NPN	
Art.-No.	
Connection diagram No.	

Type PNP	**KAS-80-26-A-PTFE-1"-StEx-N**
Art.-No.	**KA 0264**
Connection diagram No.	**6**
Operating voltage (U_B)	10...30 V DC
Output current max. (I_e)	2 x 150 mA
Load current min.	-
Voltage drop max. (U_d)	≤ 2.0 V
Permitted residual ripple max.	10 %
No-load current (I_o)	typ. 15 mA
Frequency of operating cycles max.	50 Hz
Permitted ambient temperature	-25...+90°C
LED-display	green/yellow
Protective circuit	built-in
Degree of protection IEC 529	IP 67
Connection cable	2 m 4 x 0.34 mm²
Housing material	PTFE
Active surface	PTFE
Lid	PC

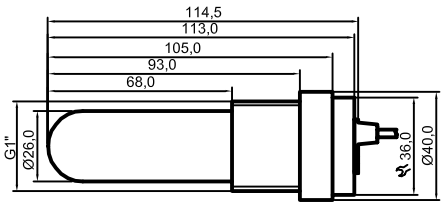

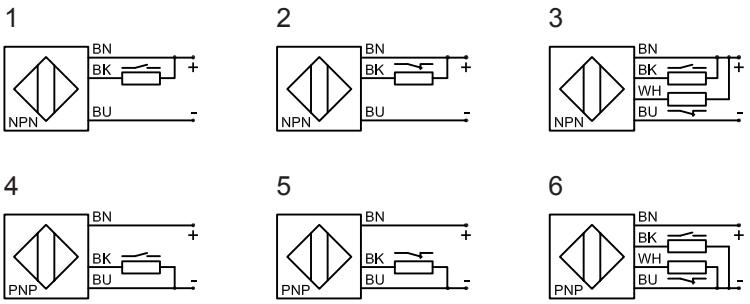

All specifications are subject to change without notice. (14-02-2005)

RECHNER Industrie-Elektronik GmbH • Gaußstraße 8-10 • D-68623 Lampertheim • Tel. (0 62 06) 50 07-0 • Fax (0 62 06) 50 07-36 • e-mail: info@rechner-sensors.de • www.rechner-sensors.de

Certificate: CE

Capacitive sensors

HIGH PERFORMANCE

Series 80 - PNP

Housing Ø = 26mm/ 1“/ 40mm

- **Housing material PTFE**
- **Useable for an ambient temperature up to +100°C**
- **Ideal for detection of chemically aggressive media**
- **Suitable for food and pharmaceutical applications**
- **Special version with flange. Sealing can be made with a gasket or PTFE-tape (not supplied with the sensor)**

Technical data

Operating distance Sn [mm], flush mounting	5, no
Operating distance min./max. [mm] adjustable	0..20
Electrical version	4-wire DC
Output	antivalent
Type NPN	
Art.-No.	
Connection diagram No.	

Type PNP	**KAS-80-26-A-200-PTFE-1"**
Art.-No.	**KA 0423**
Connection diagram No.	**6**
Operating voltage (U_B)	10...35 V DC
Output current max. (I_e)	2 x 250 mA
Load current min.	-
Voltage drop max. (U_d)	≤ 2.0 V
Permitted residual ripple max.	10 %
No-load current (I_o)	typ. 15 mA
Frequency of operating cycles max.	50 Hz
Permitted ambient temperature	-25...+100°C/CIP 120°C
LED-display	green/yellow
Protective circuit	built-in
Degree of protection IEC 529	IP 67
Connection cable	5 m PTFE 4 x 0.22 mm²
Housing material	PTFE
Active surface	PTFE
Lid	PTFE

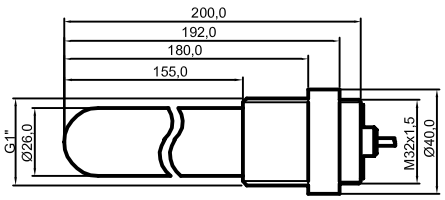

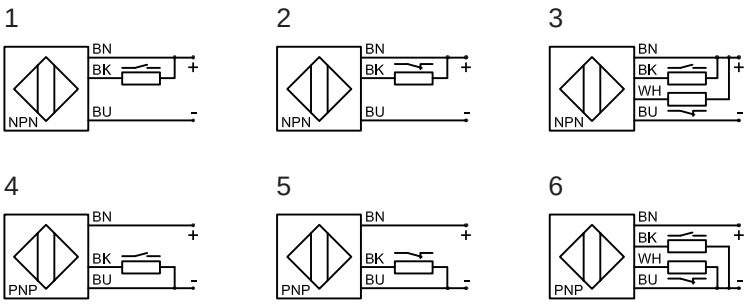

All specifications are subject to change without notice. (16-05-2006)

RECHNER Industrie-Elektronik GmbH • Gaußstraße 8-10 • D-68623 Lampertheim • Tel. (0 62 06) 50 07-0 • Fax (0 62 06) 50 07-36 • e-mail: info@rechner-sensors.de • www.rechner-sensors.de

Certificate: **DMT 01 ATEX E 157**

Capacitive sensors
Series 80 - PNP - StEx - ATEX

HIGH PERFORMANCE

Housing Ø = 26mm/ 1"/ 40mm

- **Ex II 1/2 D IP 67 T 101°C**
- **For use in zone 20**
- **Ex II 2 G EEx m II**
- **For use in areas where there is a risk of explosion.**
- **Housing material PTFE**
- **Special version with flange. Sealing can be made with a gasket or PTFE-tape (not supplied with the sensor)**

Technical data

Operating distance Sn [mm], flush mounting	5, no
Operating distance min./max. [mm] adjustable	0...20
Electrical version	4-wire DC
Output	antivalent
Type NPN	
Art.-No.	
Connection diagram No.	

Type PNP	**KAS-80-26-A-200-PTFE-1"-StEx-N**
Art.-No.	**KA 0444**
Connection diagram No.	**6**
Operating voltage (U_B)	10...30 V DC
Output current max. (I_e)	2 x 150 mA
Load current min.	-
Voltage drop max. (U_d)	≤ 2.0 V
Permitted residual ripple max.	10 %
No-load current (I_o)	typ. 15 mA
Frequency of operating cycles max.	50 Hz
Permitted ambient temperature	-25...+90°C
LED-display	green/yellow
Protective circuit	built-in
Degree of protection IEC 529	IP 67
Connection cable	2 m 4 x 0.34 mm²
Housing material	PTFE
Active surface	PTFE
Lid	PC

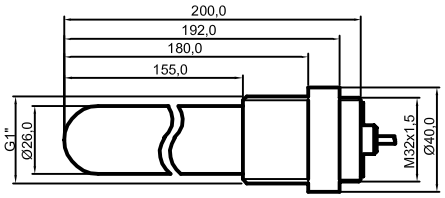

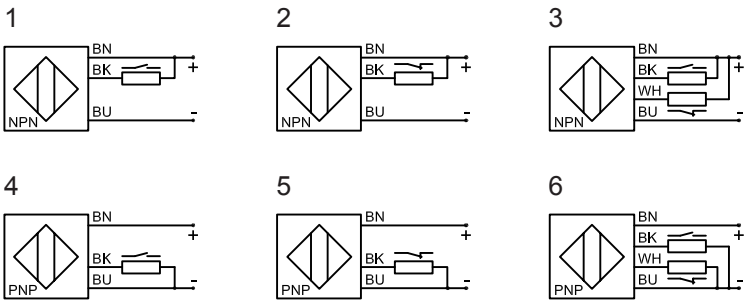

All specifications are subject to change without notice. (17-05-2005)

RECHNER Industrie-Elektronik GmbH • Gaußstraße 8-10 • D-68623 Lampertheim • Tel. (0 62 06) 50 07-0 • Fax (0 62 06) 50 07-36 • e-mail: info@rechner-sensors.de • www.rechner-sensors.de

Sensore capacitivo KAS
Serie 80 - PNP

HIGH PERFORMANCE

Custodia Triclamp = Ø 26mm

- **Materiale custodia: PTFE**
- **Per temperature ambiente fino a +100°C**
- **Ideale per il rilevamento di prodotti chimici aggressivi**
- **Adatto per applicazioni nell'industria alimentare e farmaceutica**

Certificazione: CE

Dati tecnici	
Distanza di rilevamento Sn (mm), montaggio a filo	5, no
Distanza di rilevamento min./max. (mm) regolabile	0...20
Esecuzione elettrica	4 fili DC
Funzione d'uscita	antivalente
Tipo NPN	
Art. n.	
Diagramma di collegamento n.	

Tipo PNP	**KAS-80-26-A-PTFE-Tri-100°C**
Art. n.	**KA0415**
Diagramma di collegamento n.	**6**
Tensione di lavoro (U_b)	10...30 V DC
Corrente d'uscita max (I_e)	2 x 150 mA
Corrente di carico minima	-
Caduta di tensione max. (U_d)	≤ 2.0 V
Ondulazione residua permessa max.	10 %
Consumo a vuoto (I_o)	tip. 15 mA
Frequenza operatività max.	50 Hz
Temperatura ambiente permessa	-25...+100°C
Led display, stato operativo	verde/giallo
Protezione circuito	incorporato
Grado di protezione IEC 529	IP 67
Connessione	2 m, 4 x 0.5 mm²
Materiale custodia	PTFE
Materiale superficie attiva	PTFE
Materiale coperchietto finale	PA/PPO

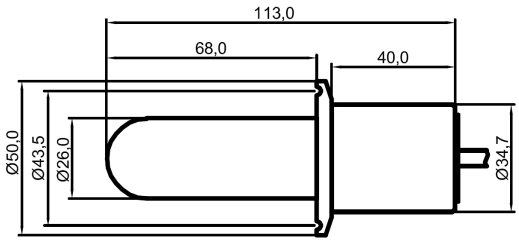

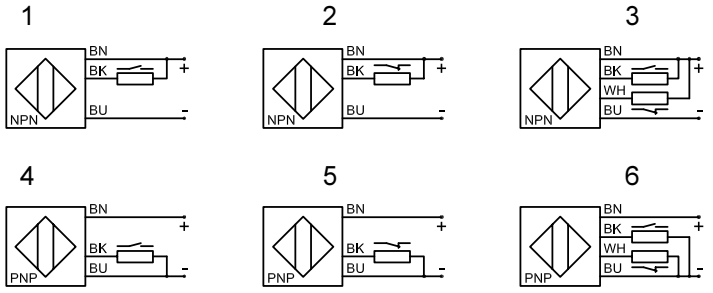

06/06 - tutti i dati sono soggetti a variazione senza preavviso

Capacitive sensors
Series 80 - PNP - StEx - ATEX

HIGH PERFORMANCE

Housing Ø = 26mm/Triclamp

- Ex II 1/2 D IP 67 T 101°C
- For use in zone 20
- Ex II 2 G EEx m II
- For use in areas where there is a risk of explosion.
- Housing material PTFE
- With Triclamp process connection

Certificate: **DMT 01 ATEX E 157**

CE

Technical data

Operating distance Sn [mm], flush mounting	5, no
Operating distance min./max. [mm] adjustable	0...20
Electrical version	4-wire DC
Output	antivalent
Type NPN	
Art.-No.	
Connection diagram No.	

Type PNP	**KAS-80-26-A-PTFE-Tri-StEx-N**
Art.-No.	**KA 0421**
Connection diagram No.	**6**
Operating voltage (U_B)	10...30 V DC
Output current max. (I_e)	2 x 150 mA
Load current min.	-
Voltage drop max. (U_d)	≤ 2.0 V
Permitted residual ripple max.	10 %
No-load current (I_o)	typ. 15 mA
Frequency of operating cycles max.	50 Hz
Permitted ambient temperature	-25...+90°C
LED-display	green/yellow
Protective circuit	built-in
Degree of protection IEC 529	IP 67
Connection cable	2 m 4 x 0.5 mm²
Housing material	PTFE
Active surface	PTFE
Lid	PC

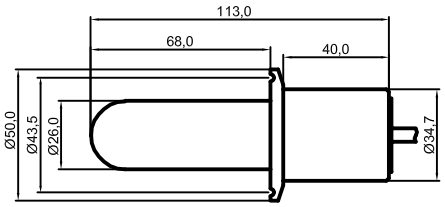

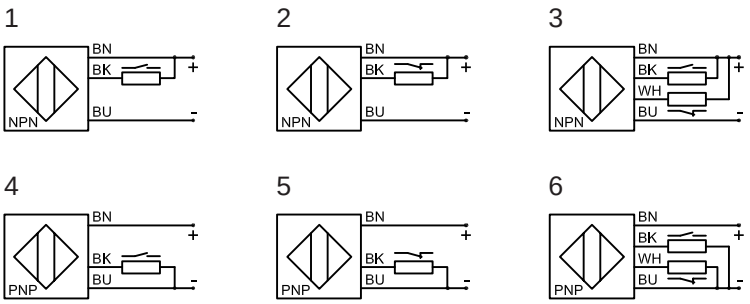

All specifications are subject to change without notice. (17-05-2005)

RECHNER Industrie-Elektronik GmbH • Gaußstraße 8-10 • D-68623 Lampertheim • Tel. (0 62 06) 50 07-0 • Fax (0 62 06) 50 07-36 • e-mail: info@rechner-sensors.de • www.rechner-sensors.de